REVISION HISTORY				
SHEET	REV	DESCRIPTION	DATE	APPROVED
1-7	–	GOV. RELEASE OF GENERIC WFO/WFO-C DWG: G-AWP-GENERIC-302-120	1/09/01	K.E.D.
1,2	A	MODIFY PER ECN NO. AWIP-ECN-000005	02/07/17	K.E.D.
1	B	MODIFY PER ECN NO. AWIP-ECN-000011	02/11/06	K.E.D.
5	A			

NOTES:

1. INTERPRET DRAWING IN ACCORDANCE WITH MIL-STD-100, MIL-T-31000 AND ASME Y14.24M.
2. THE FIRST DIGIT OF THE FIND NO. REPRESENTS THE RACK IN WHICH THE ITEM IS LOCATED. (ex. FIND NO. 4- 9 IS LOCATED IN RACK NO. 4) A FIRST DIGIT OF 0 REPRESENTS EQUIPMENT EXTERNAL TO THE RACKS.
3. THESE CABLES ARE PART OF HP MULTIPLEXOR PACKAGE. SEE DWG. NO. AWP-000000-109-0205.
4. FOR SITE SPECIFIC CABLE INFORMATION, SEE SITE DWG. NO. AWP-xxxxxx-108-130. (ex. AWP-GLD000-108-130 FOR GOODLAND SITE)
5. FOR ADDITIONAL CABLE INFORMATION, SEE DWG NO. G-AWP-GENERIC-304-110, SH 1.
6. FOR ADDITIONAL CABLE INFORMATION, SEE DWG NO. G-AWP-GENERIC-304-120, SH 1.
7. FOR ADDITIONAL CABLE INFORMATION, SEE DWG NO. G-AWP-GENERIC-304-120, SH 2.
8. FOR ADDITIONAL CABLE INFORMATION, SEE DWG NO. G-AWP-GENERIC-304-120, SH 3.
9. FOR ADDITIONAL CABLE INFORMATION, SEE DWG NO. G-AWP-GENERIC-304-120, SH 4.
10. FOR ADDITIONAL CABLE INFORMATION, SEE DWG NO. G-AWP-GENERIC-304-130, SH 1.
11. FOR ADDITIONAL CABLE INFORMATION, SEE DWG NO. G-AWP-GENERIC-304-140, SH 1.
12. FOR ADDITIONAL CABLE INFORMATION, SEE DWG NO. G-AWP-GENERIC-304-150, SH 1.
13. FOR ADDITIONAL CABLE INFORMATION, SEE DWG NO. G-AWP-GENERIC-304-170, SH 1.
14. FOR ADDITIONAL CABLE INFORMATION, SEE DWG NO. G-AWP-GENERIC-304-180, SH 1.
15. FOR ALL CONNECTIONS, SEE DWG. NO. G-AWP-GENERIC-302-110, SH 2.
16. FOR ALL CONNECTIONS, SEE DWG. NO. G-AWP-GENERIC-302-120, SH 2.
17. FOR ALL CONNECTIONS, SEE DWG. NO. G-AWP-GENERIC-302-120, SH 3.
18. FOR ALL CONNECTIONS, SEE DWG. NO. G-AWP-GENERIC-302-120, SH 4.
19. FOR ALL CONNECTIONS, SEE DWG. NO. G-AWP-GENERIC-302-120, SH 5.
20. RESERVED.
21. FOR ALL CONNECTIONS, SEE DWG. NO. G-AWP-GENERIC-302-120, SH 6.
22. FOR ALL CONNECTIONS, SEE DWG. NO. G-AWP-GENERIC-302-130, SH 2.
23. FOR ALL CONNECTIONS, SEE DWG. NO. G-AWP-GENERIC-302-140, SH 2.
24. FOR ALL CONNECTIONS, SEE DWG. NO. G-AWP-GENERIC-302-140, SH 4.
25. FOR ALL CONNECTIONS, SEE DWG. NO. G-AWP-GENERIC-302-150, SH 2.
26. FOR ALL CONNECTIONS, SEE DWG. NO. G-AWP-GENERIC-302-170, SH 2.
27. FOR ALL CONNECTIONS, SEE DWG. NO. G-AWP-GENERIC-302-180, SH 2.
28. THESE CABLES ARE PART OF SIMPACT SYNCHRONOUS COMMUNICATIONS PACKAGE. SEE DWG. NO. AWP-000000-109-0204.
29. FOR ALL CONNECTIONS, SEE DWG. NO. G-AWP-GENERIC-302-120, SH 6.
30. FOR ALL CONNECTIONS, SEE DWG. NO. G-AWP-GENERIC-302-120, SH 7.
31. FOR ALL CONNECTIONS, SEE DWG. NO. G-AWP-GENERIC-302-140, SH 5.
32. FOR ALL CONNECTIONS SEE RFC DWG. NO. G-AWP-GENERIC-302-270, SH 2.
33. ALTERNATE PRODUCT CONFIGURATIONS USED IN WFO (FIND NO. 1-17) AND AND WFO-C (FIND NO. 1-18) SYSTEMS.
34. THESE CONNECTIONS ARE PRESENT ONLY IN THE WFO SYSTEM.
35. ALTERNATE CONNECTIONS USED IN WFO AND WFO-C SYSTEMS.
36. WIRE NUMBERS STARTING WITH LA1CW (e.g. LA1CW13) ARE SITE DEPENDENT DUE TO WIRE LENGTH. THEREFORE, THE NWS NUMBERS ASSIGNED TO THESE CABLES ARE SITE DEPENDENT.
37. THE ASYNCHRONOUS INTERFACE (FIND NO. 3-3) IS CURRENTLY NOT INSTALLED IN THE WFO DTX SITE CONFIGURATION

FIND NO.	ITEM DESCRIPTION	SYSTEM ASSEMBLY DRAWING NO.	SHOWN ON SHEET NO.	PRODUCT DRAWING NO.
2-17	SYNC CP - 2, 8 PORTS	G-AWP-GENERIC-101-100, SH 3	SH 4	G-AWP-000000-109-0204
2-16	SYNC CP - 1, 8 PORTS	G-AWP-GENERIC-101-100, SH 3	SH 4	G-AWP-000000-109-0204
3-12	SWITCH PANEL - 3, WFO / RFC	G-AWP-GENERIC-101-100, SH 4	SH 2, 5	G-AWP-000000-109-0210
2-15	SWITCH PANEL - 2, WFO / RFC	G-AWP-GENERIC-101-100, SH 3	SH 2, 4	G-AWP-000000-109-0210
1-18	SWITCH PANEL - 1, WFO-C	G-AWP-GENERIC-101-100, SH 2	SH 2	G-AWP-000000-109-0210
1-17	SWITCH PANEL - 1, WFO	G-AWP-GENERIC-101-100, SH 2	SH 2	G-AWP-000000-109-0210
7- 5	TERMINAL SERVER LDAD	G-AWP-GENERIC-101-100, SH 8	SH 7	G-AWP-000000-109-0220
4- 3	TELCO INTERFACE PATCH PANEL - 2	G-AWP-GENERIC-101-100, SH 5	SH 6	AWP-000000-109-0222
4- 2	TELCO INTERFACE PATCH PANEL - 1	G-AWP-GENERIC-101-100, SH 5	SH 6	AWP-000000-109-0222
3- 9	MONITOR & CONTROL INTERFACE	G-AWP-GENERIC-101-100, SH 4	SH 3, 6	G-AWP-000000-109-0220
4- 9	MODEMS, DIAL/ DEDICATED	G-AWP-GENERIC-101-100, SH 5	SH 6, 7	G-AWP-000000-109-0221
7- 1	LDAD COMM PROCESSOR	G-AWP-GENERIC-101-100, SH 8	SH 8	G-AWP-000000-109-0205
7- 2	FAX MODEM	G-AWP-GENERIC-101-100, SH 8	SH 7	G-AWP-000000-109-0201
7- 8	DTMF 2	G-AWP-GENERIC-101-100, SH 8	SH 8	G-AWP-000000-109-0200
7- 7	DTMF 1	G-AWP-GENERIC-101-100, SH 8	SH 8	G-AWP-000000-109-0200
7- 6	ASYNCHRONOUS INTERFACE - 16 CHANNEL (LMDP)	G-AWP-GENERIC-101-100, SH 8	SH 8	G-AWP-000000-109-0212
3- 3	ASYNCHRONOUS INTERFACE - 16 CHANNEL (MDP 2-1)	G-AWP-GENERIC-101-100, SH 4	SH 5	G-AWP-000000-109-0212
3- 2	ASYNCHRONOUS INTERFACE - 16 CHANNEL (MDP 1-1)	G-AWP-GENERIC-101-100, SH 4	SH 5	G-AWP-000000-109-0212

SEE NOTE 33

SEE NOTE 37

ITEM LIST

UNLESS OTHERWISE SPECIFIED
DIMENSIONS ARE IN INCHES
TOLERANCES, ANGLES, ±.5°
3 PLACES DECIMALS ±.005
2 PLACES DECIMALS ±.02

ENGINEERING DIVISION
SILVER SPRING, MD. 20910

PREPARED	B.O.F.	
D.S.T.	J.R.A.	
DESIGN	W.J.B.	
CH.	K.E.D.	
APPROVED	D.BOSCO	
DATE		

U.S. DEPARTMENT OF COMMERCE
NATIONAL OCEANIC & ATMOSPHERIC ADMINISTRATION
NATIONAL WEATHER SERVICE

AWIPS - WFO/WFO-C COMM. PROCESSOR INTERCONNECT (GENERIC)

SIZE	CAGE CODE	DRAWING NO.	
D	82187	G-AWP-GENERIG-302-120	B
SCALE NONE		SHEET 1 of 7	FILE GEN2121B

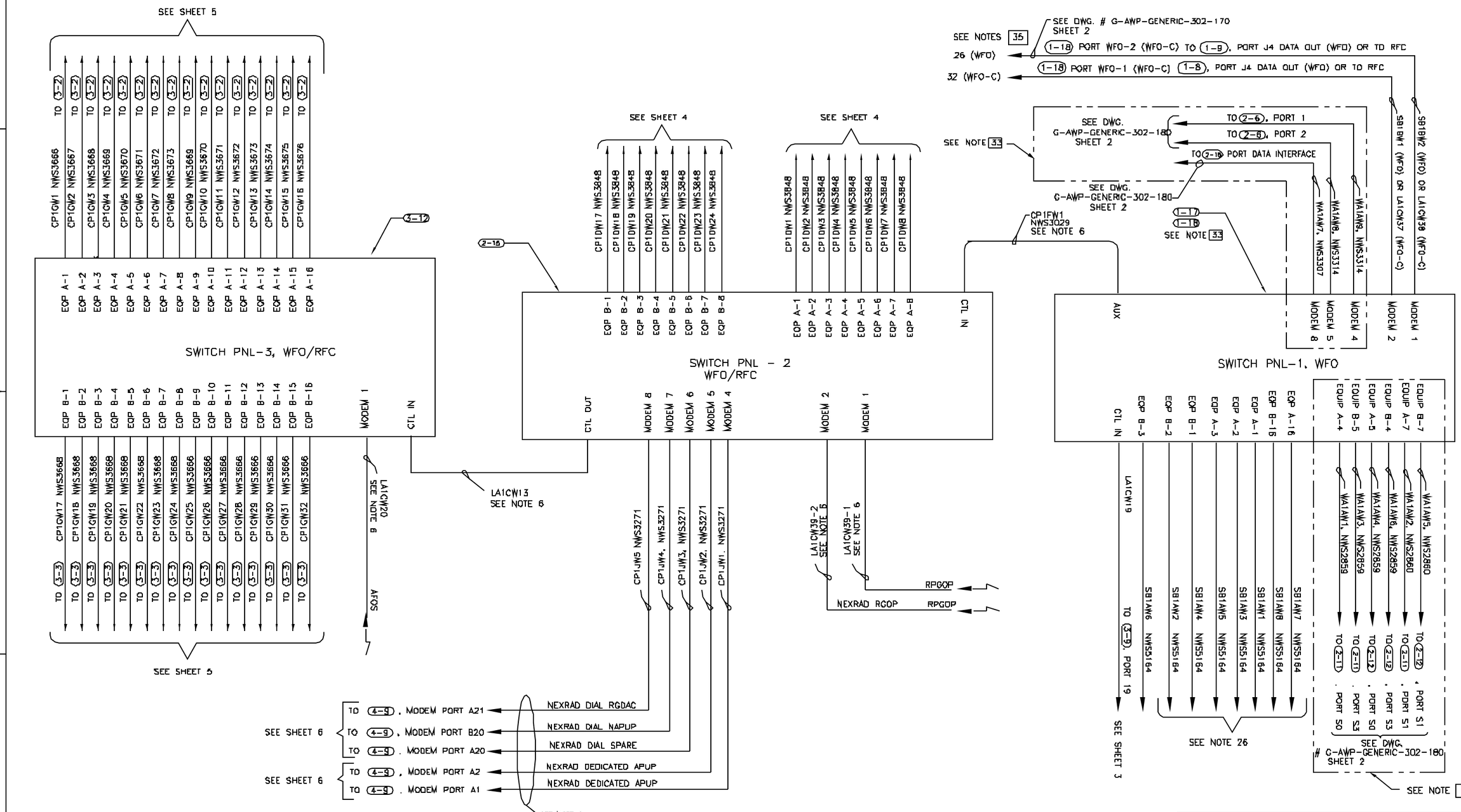

SIZE	CAGE CODE	DRAWING NO.	
D	82187	G-AWP-GENERIC-302-120	A
SCALE NONE		SHEET 2 OF 7	FILE GEN2122A

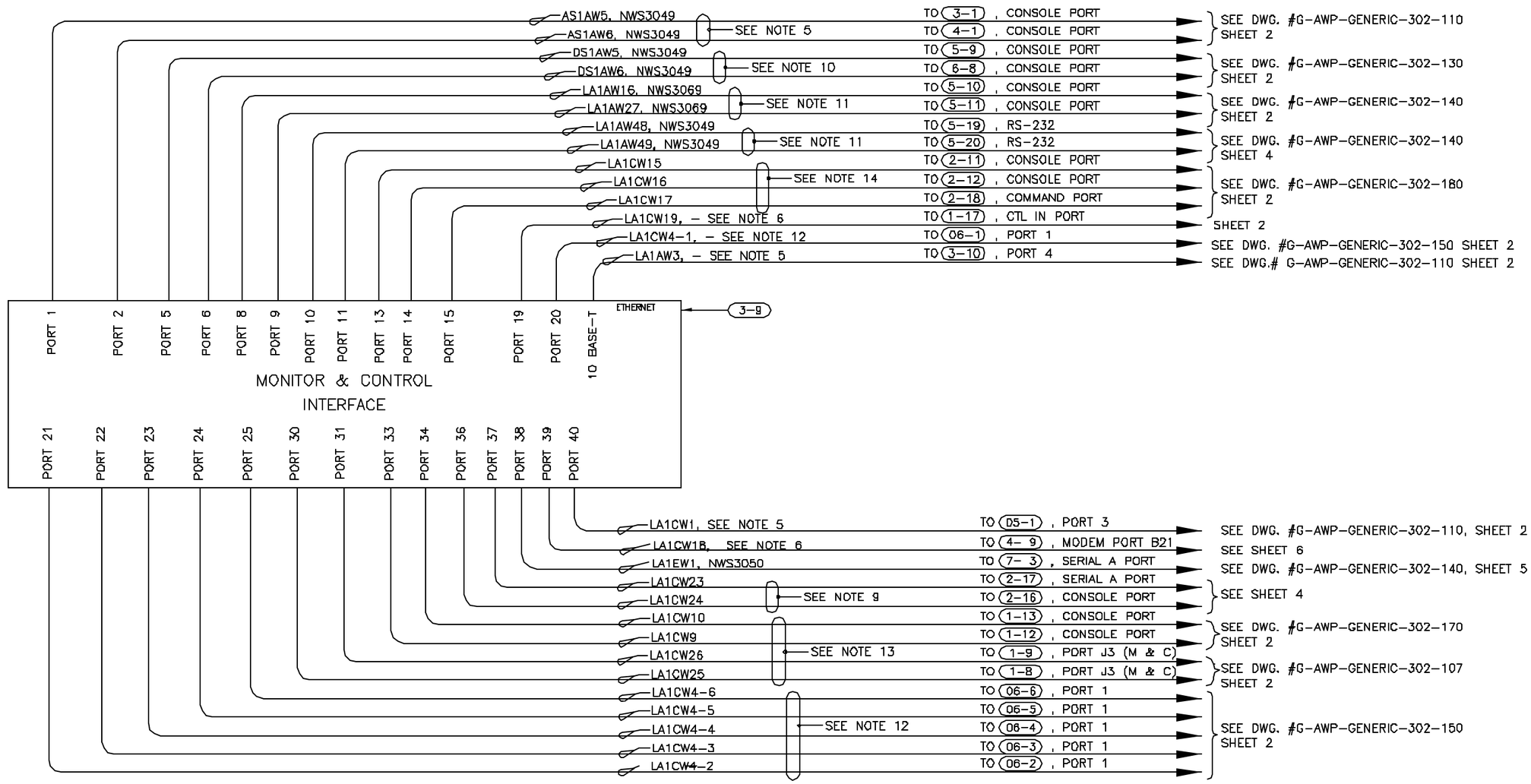

SIZE	CAGE CODE	DRAWING NO.	
D	82187	G-AWP-GENERIC-302-120	–
SCALE NONE		SHEET 3 OF 7	FILE GEN2123

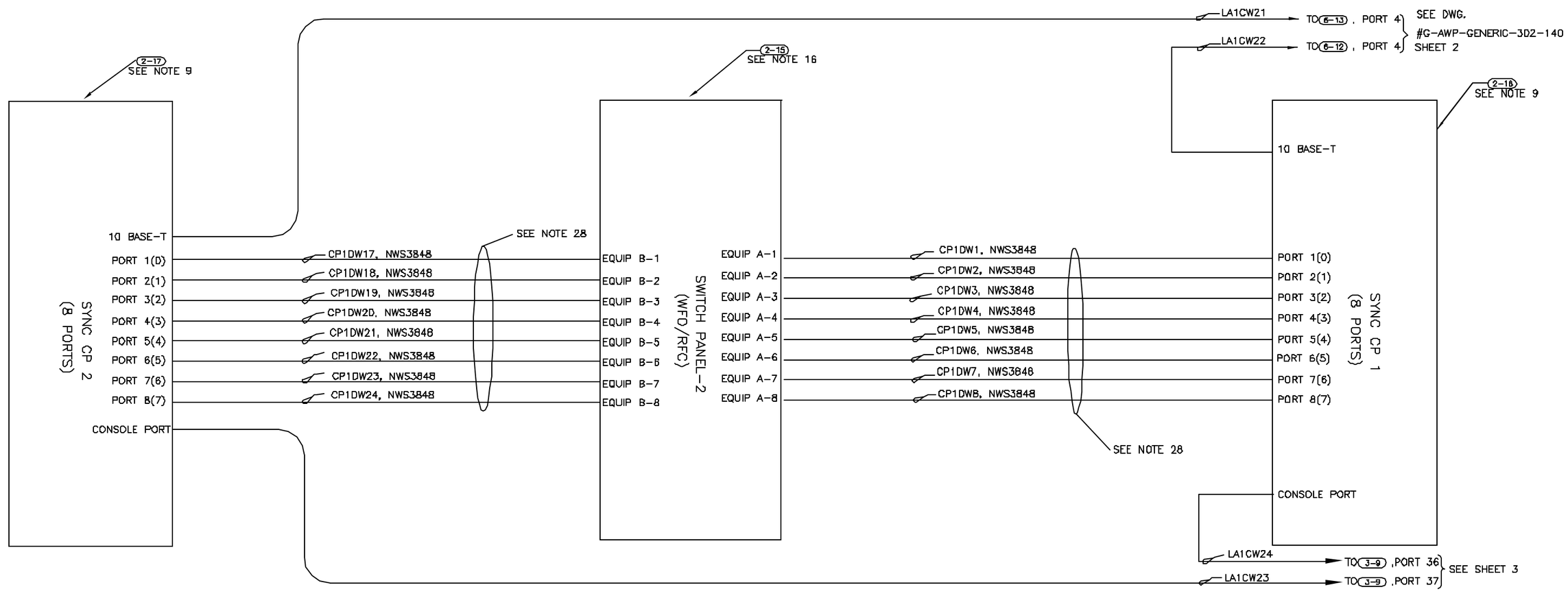

SIZE	CAGE CODE	DRAWING NO.	
D	82187	G-AWP-GENERIC-302-120	-
SCALE NONE		SHEET 4 OF 7	FILE GEN2124

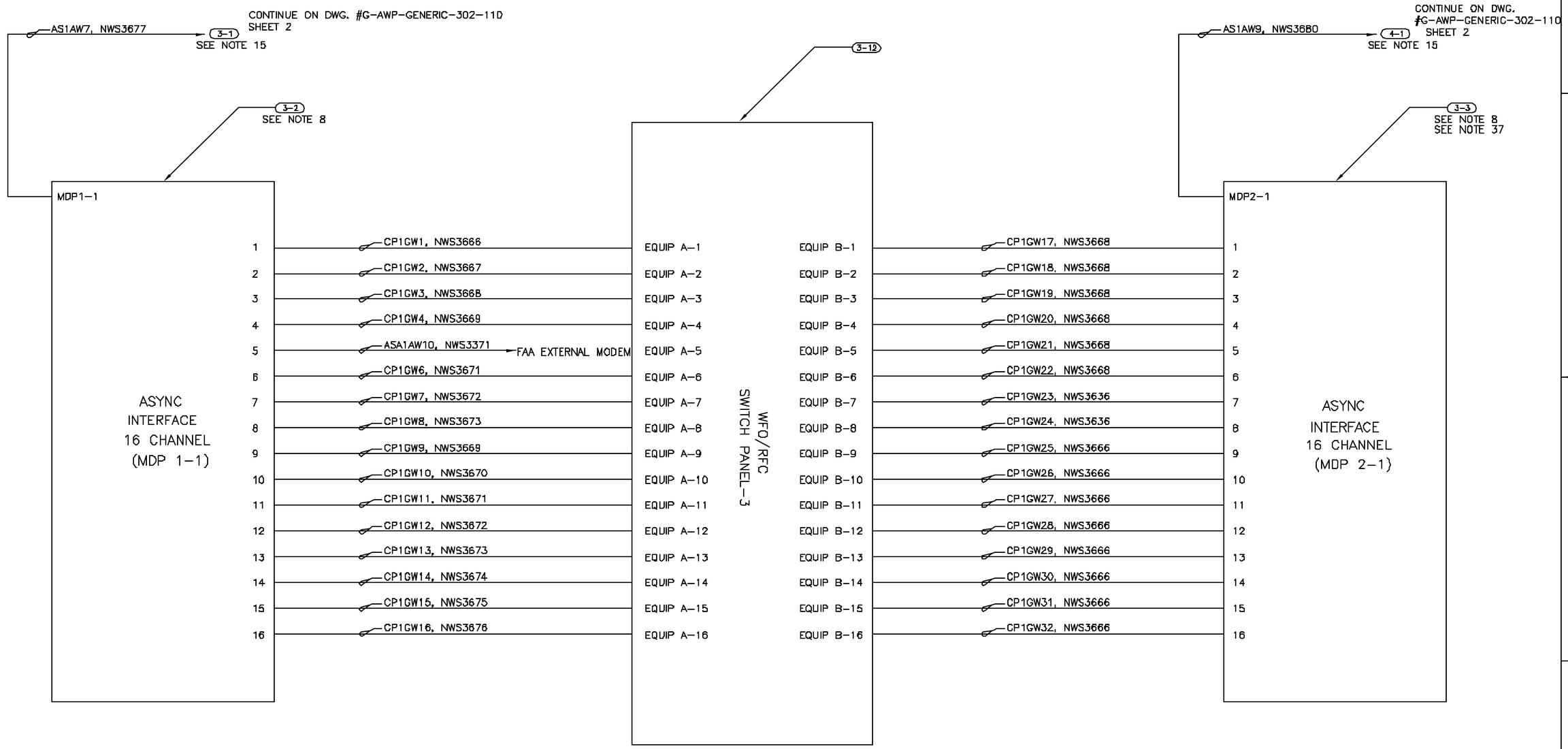

SIZE	CAGE CODE	DRAWING NO.	
D	82187	G-AWP-GENERIC-302-120	A
SCALE NONE		SHEET 5 OF 7	FILE: GEN2125A

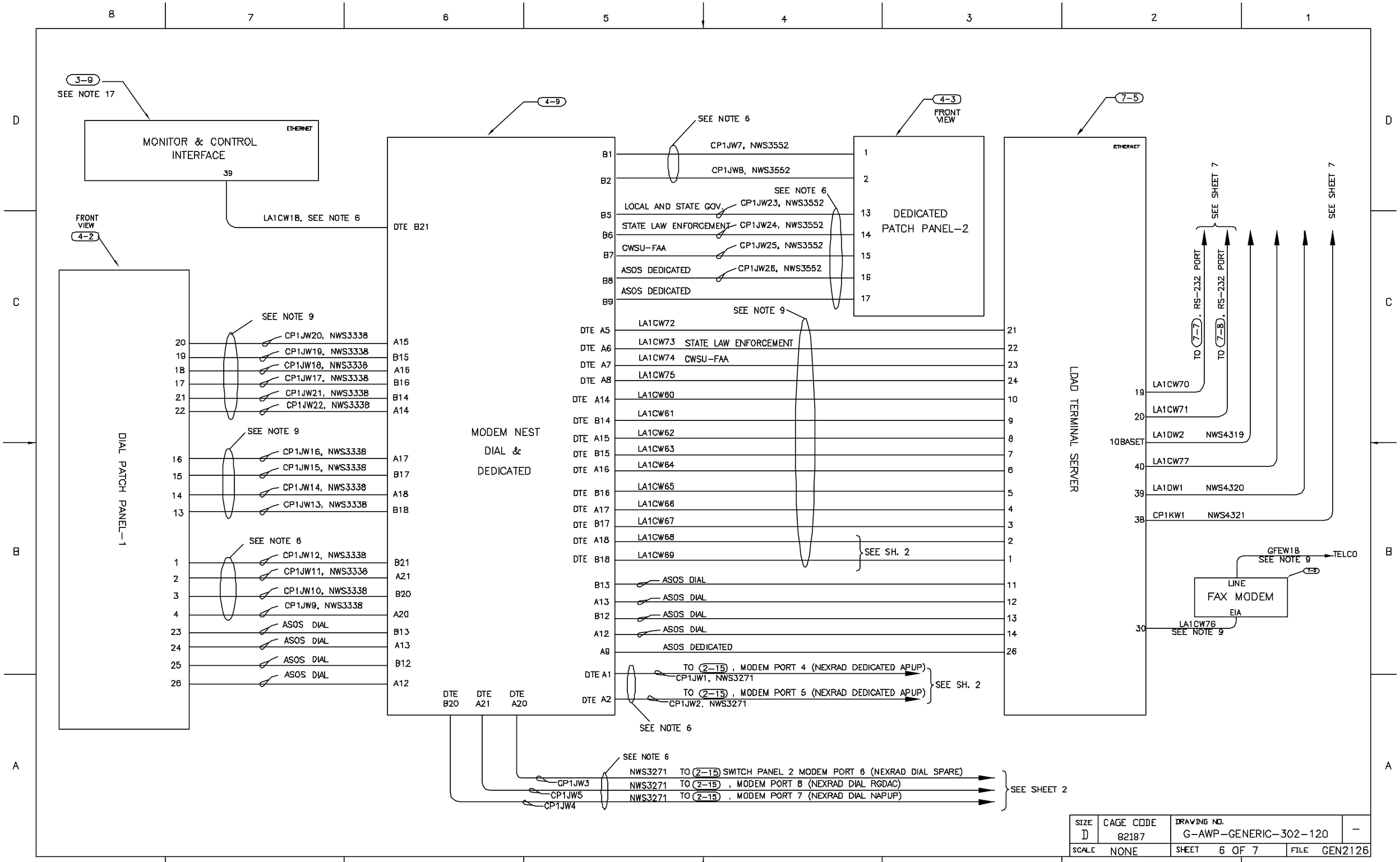

SIZE	CAGE CODE	DRAWING NO.	
D	82187	G-AWP-GENERIC-302-120	–
SCALE NONE		SHEET 6 OF 7	FILE GEN2126

REVISIONS					
ZONE	LTR	DESCRIPTION	DATE	REV. BY	APP'D

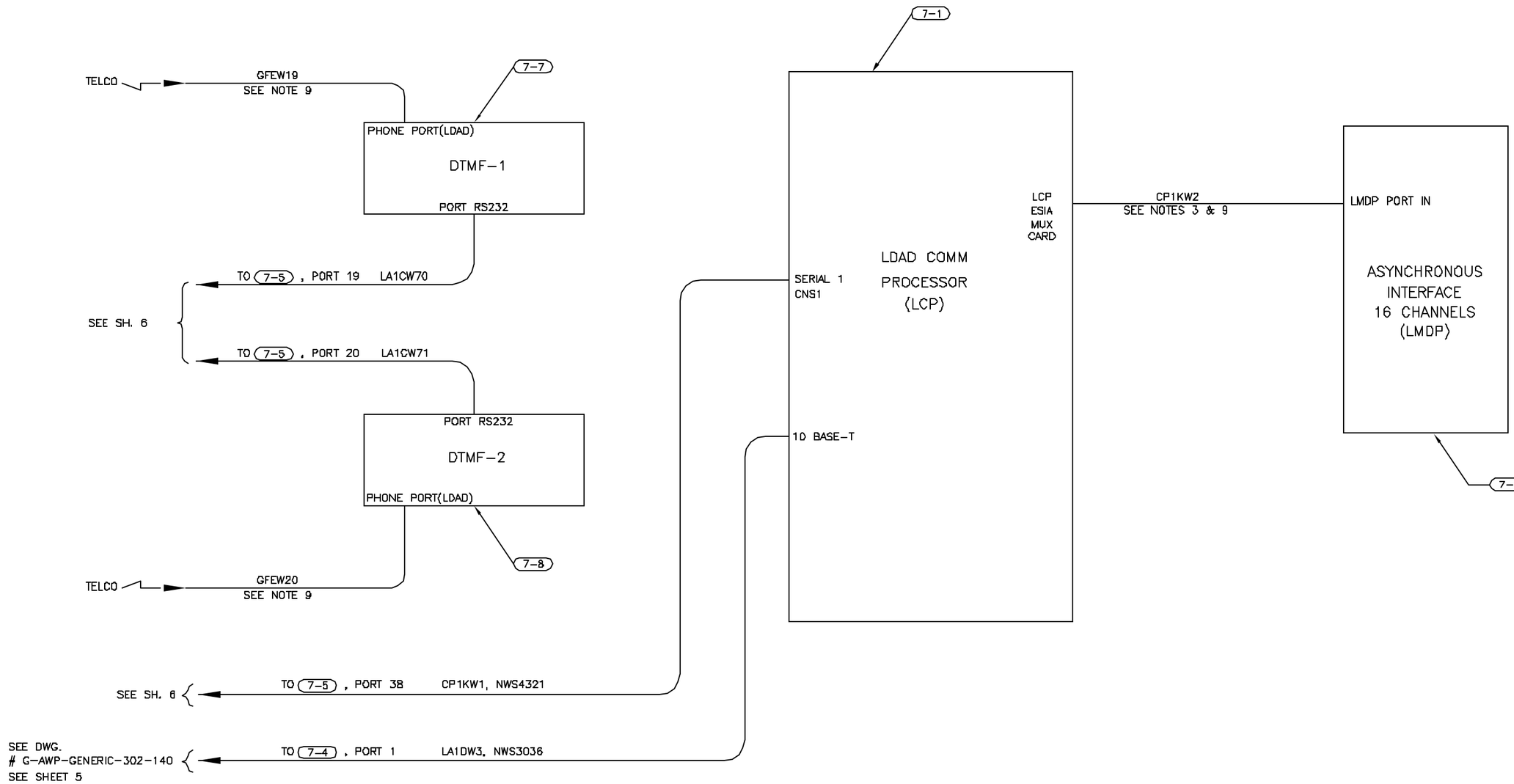

SIZE	CAGE CODE	DRAWING NO.	
D	82187	G-AWP-GENERIC-302-120	–
SCALE NONE		SHEET 7 OF 7	FILE GEN2127