NOTES:

1. INTERPRET DRAWING IN ACCORDANCE WITH MIL-STD-100, MIL-T-31000 AND ASME Y14.24M.
2. THE FIRST DIGIT OF THE FIND NO. REPRESENTS THE RACK IN WHICH THE ITEM IS LOCATED. (ex. FIND NO. 6-16 IS LOCATED IN RACK NO. 6) A FIRST DIGIT OF 0 REPRESENTS EQUIPMENT EXTERNAL TO THE RACKS.
3. FOR SITE SPECIFIC CABLE INFORMATION, SEE SITE DWG. NO. AWP-xxxxxx-108-130. (ex. AWP-GLD000-108-130 FOR GOODLAND SITE)
4. FOR ADDITIONAL CABLE INFORMATION, SEE DWG. NO. G-AWP-GENERIC-304-110.
5. FOR ADDITIONAL CABLE INFORMATION, SEE DWG. NO. G-AWP-GENERIC-304-130.
6. FOR ADDITIONAL CABLE INFORMATION, SEE DWG. NO. G-AWP-GENERIC-304-140.
7. FOR ADDITIONAL CABLE INFORMATION, SEE DWG. NO. G-AWP-GENERIC-304-150.
8. FOR ALL CONNECTIONS, SEE DWG. NO. G-AWP-GENERIC-302-110, SH 2.
9. FOR ALL CONNECTIONS, SEE DWG. NO. G-AWP-GENERIC-302-120, SH 3.
10. FOR ALL CONNECTIONS, SEE DWG. NO. G-AWP-GENERIC-302-120, SH 4.
11. FOR ALL CONNECTIONS, SEE DWG. NO. G-AWP-GENERIC-302-130, SH 2.
12. FOR ALL CONNECTIONS, SEE DWG. NO. G-AWP-GENERIC-302-150, SH 2.
13. FOR ALL CONNECTIONS, SEE DWG. NO. G-AWP-GENERIC-302-150, SH 3.
14. FOR ALL CONNECTIONS, SEE DWG. NO. G-AWP-GENERIC-302-160, SH 2.
15. FOR ALL CONNECTIONS, SEE DWG. NO. G-AWP-GENERIC-302-170, SH 2.
16. FOR ALL CONNECTIONS, SEE DWG. NO. G-AWP-GENERIC-302-180, SH 2.
17. CABLE CONNECTIONS TO FDDI A&B PATCH PANEL - 4 (FIND NO. 5-15) ARE DEPENDENT ON THE NUMBER OF WORKSTATIONS INSTALLED. WHERE INDIVIDUAL WORKSTATONS ARE NOT USED A JUMPER WILL CONNECT THE "A" AND "B" PORTS AS SHOWN ON THE REAR OF THE PATCH PANEL FOR EACH OMITTED WORKSTATION.
18. CABLE CONNECTIONS TO THE HIGH-SPEED LAN SWITCHES (FIND NOS. 5-19 AND 5-20) ARE DEPENDENT ON THE NUMBER OF X-TERMINALS INSTALLED.
19. FOR ALL CONNECTIONS, SEE DWG. NO. G-AWP-GENERIC-302-120, SH 6.
20. FOR ALL CONNECTIONS, SEE DWG. NO. G-AWP-GENERIC-302-120, SH 7.
21. ALTERNATE CONNECTIONS FOR WFO AND WFO-C SYSTEMS.
22. ADDRESS TRAINING CABLE CONFIG. REQTS.
23. WIRE NUMBERS STARTING WITH LA1CW (e.g. LA1CW13) ARE SITE DEPENDENT DUE TO WIRE LENGTH. THEREFORE, THE NWS NUMBERS ASSIGNED TO THESE CABLES ARE SITE DEPENDENT.
24. NOT ALL FDDI P/P POSITIONS ARE ACTUALLY CABLED AS SHOWN IN DRAWINGS. ONLY THE POSITIONS USED FOR WORKSTATIONS, SERVERS HUBS ACTUALLY INSTALLED ARE CONNECTED AT THE PATCH PANEL. THE PATCH CABLE ON THE FRONT OF THE PATCH PANEL DOES NOT CONNECT THE LAST PATCH PANEL POSITION TO THE FIRST PATCH PANEL. INSTEAD, IT CONNECTS THE LAST INSTALLED WORKSTATION-B CONNECTOR TO THE FIRST PATCH PANEL POSITION.
25. THE CONNECTION BETWEEN AWIPS ETHERNET LAN SWITCH AND THE NWWS SYSTEM IS FOR 20 SELECTED SITES. THEY ARE: KCTP/KRHA; KBOX/KTAR; KFWD/KFWR; KSLC/KSTR; KLIX/KORN; KMPX/KMSR; KILN/KTIR; KEAX/KKRF; KTSA/KTUA; KSTO/KRSA; KPQR/KPTR; PAFC/PACR; KWNS; KNHC; PHEB; PAAQ; KNEC; KNCF; TJSJ

REVISION HISTORY

SHEET	REV	DESCRIPTION	DATE	APPROVED
1	-	GOVT. RELEASE OF GENERIC WFO DRAWING: G-AWP-GENERIC-302-140	01/01/22	K.E.D
1,4	A	MODIFY DRAWING PER ECN : AWIP-ECN-000005	02/07/19	
1,4	B	MODIFY DRAWING PER ECN : AWIP-ECN-000014	02/08/30	
1,4	C	ADD TWO 5-PORT 100BaseT SWITCHES: FIND #: 1-31, 1-32	02/11/15	

FIND NO.	ITEM DESCRIPTION	SYSTEM ASSEMBLY DRAWING NO.	PRODUCT DRAWING NO.
1-32	5-PORT 100BaseT SWITCH, (SP/SW4)	G-AWP-GENERIC-101-100, SH 2	AWP-000000-109-0406
1-31	5-PORT 100BaseT SWITCH, (SP/SW3)	G-AWP-GENERIC-101-100, SH 2	AWP-000000-109-0406
7- 3	FIREWALL	G-AWP-GENERIC-101-100, SH 8	G-AWP-000000-109-0410
7- 4	LOAD LAN SWITCH	G-AWP-GENERIC-101-100, SH 8	G-AWP-000000-109-0400
6-18	POCKET HUB, (PHUBCRS)	G-AWP-GENERIC-101-100, SH 7	AWP-000000-109-0406
6-15	POCKET HUB, (PHUB7)	G-AWP-GENERIC-101-100, SH 7	AWP-000000-109-0406
6-14	POCKET HUB, (PHUB6)	G-AWP-GENERIC-101-100, SH 7	AWP-000000-109-0406
6-13	POCKET HUB, (PHUB4)	G-AWP-GENERIC-101-100, SH 7	AWP-000000-109-0406
6-12	POCKET HUB, (PHUB3)	G-AWP-GENERIC-101-100, SH 7	AWP-000000-109-0406
1-28	5-PORT 100BaseT SWITCH, (SP/SW2)	G-AWP-GENERIC-101-100, SH 2	AWP-000000-109-0406
1-25	5-PORT 100BaseT SWITCH, (SP/SW1)	G-AWP-GENERIC-101-100, SH 2	AWP-000000-109-0406
3- 9	MONITOR & CONTROL INTERFACE	G-AWP-GENERIC-101-100, SH 4	G-AWP-000000-109-0220
5-20	HIGH-SPEED LAN SWITCH - 2 (24 PORT)	G-AWP-GENERIC-101-100, SH 6	G-AWP-000000-109-0404
5-19	HIGH-SPEED LAN SWITCH - 1 (24 PORT)	G-AWP-GENERIC-101-100, SH 6	G-AWP-000000-109-0404
5-15	FDDI A&B PATCH PANEL - 4	G-AWP-GENERIC-101-100, SH 6	AWP-000000-109-0405
5-14	FDDI A&B PATCH PANEL - 3	G-AWP-GENERIC-101-100, SH 6	AWP-000000-109-0405
5-13	FDDI A&B PATCH PANEL - 2	G-AWP-GENERIC-101-100, SH 6	AWP-000000-109-0405
5-12	FDDI A&B PATCH PANEL - 1	G-AWP-GENERIC-101-100, SH 6	AWP-000000-109-0405
5-11	ETHERNET LAN SWITCH - 2	G-AWP-GENERIC-101-100, SH 6	G-AWP-000000-109-0400
5-10	ETHERNET LAN SWITCH - 1	G-AWP-GENERIC-101-100, SH 6	G-AWP-000000-109-0400

ITEM LIST

UNLESS OTHERWISE SPECIFIED
DIMENSIONS ARE IN INCHES
TOLERANCES, ANGLES, ±5°
3 PLACES DECIMALS ±.005
2 PLACES DECIMALS ±.02

ENGINEERING DIVISION
SILVER SPRING, MD. 20910

PREPARED	B.O.F.	
D.S.T.	J.R.A.	
DESIGN	D.BOSCO	
CM.	K.E.D.	
APPROVED	D.BOSCO	
DATE		

U.S. DEPARTMENT OF COMMERCE
NATIONAL OCEANIC & ATMOSPHERIC ADMINISTRATION
NATIONAL WEATHER SERVICE

AWIPS - WFO/WFO-C LOCAL AREA NETWORK INTERCONNECT (GENERIC)

SIZE	CAGE CODE	DRAWING NO.	
D	82187	G-AWP-GENERIC-302-140	C
SCALE NONE		SHEET 1 OF 5	FILE GEN2141C

REVISIONS					
ZONE	LTR	DESCRIPTION	DATE	REV. BY	APP'D

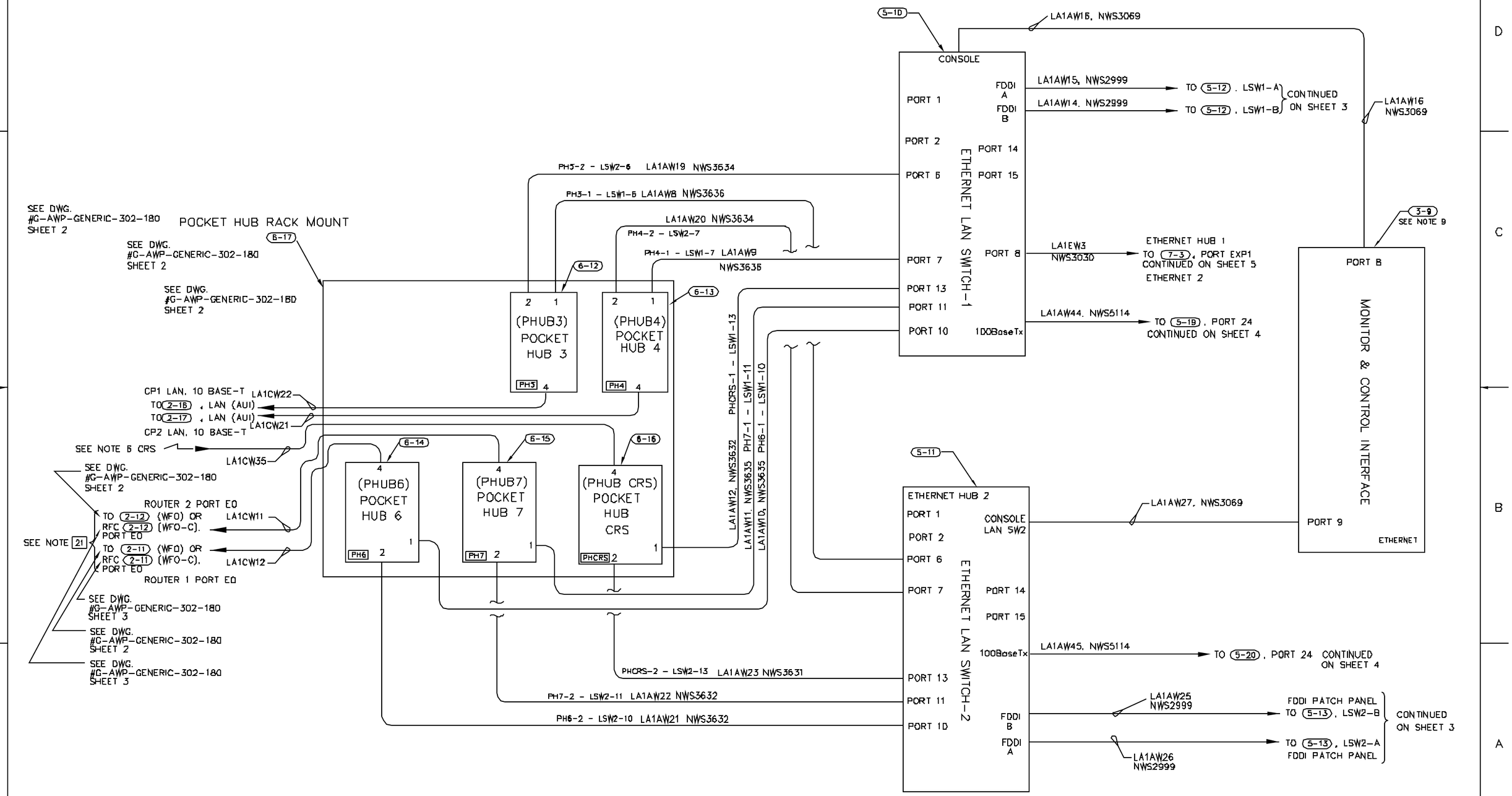

SIZE	CAGE CODE	DRAWING NO.	
D	82187	G-AWP-GENERIC-302-140	A
SCALE NONE		SHEET 2 OF 5	FILE GEN2142A

REVISIONS					
ZONE	LTR	DESCRIPTION	DATE	REV. BY	APP'D

VIEWED FROM THE FRONT SIDE OF THE PANEL, REAR SIDE OF THE CABINET

ALL CIRCUIT CONNECTIONS ARE MADE TO THE REAR SIDE OF THE PANEL WHICH FACES THE FRONT OF THE CABINET

ALL RING CONNECTIONS ARE MADE TO THE FRONT SIDE OF THE PANEL WHICH FACES THE REAR OF THE CABINET

VIEWED FROM THE REAR SIDE OF THE PANEL, FRONT SIDE OF THE CABINET

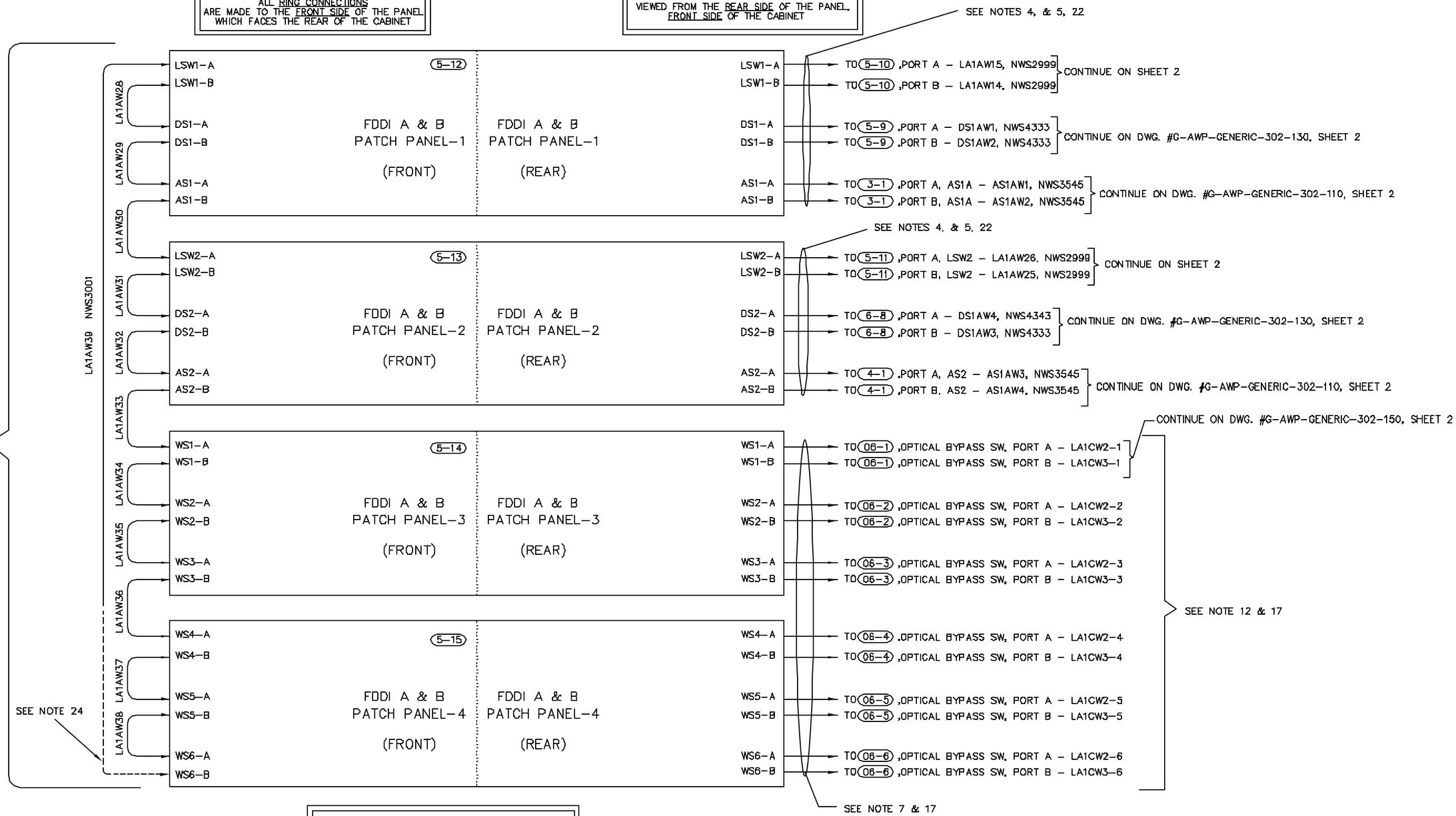

SIX WORKSTATIONS CONFIGURATION

SIZE	CAGE CODE	DRAWING NO.	
D	82187	G-AWP-GENERIC-302-140	–
SCALE NONE		SHEET 3 OF 5	FILE GEN2143

REVISIONS					
ZONE	LTR	DESCRIPTION	DATE	REV. BY	APP'D

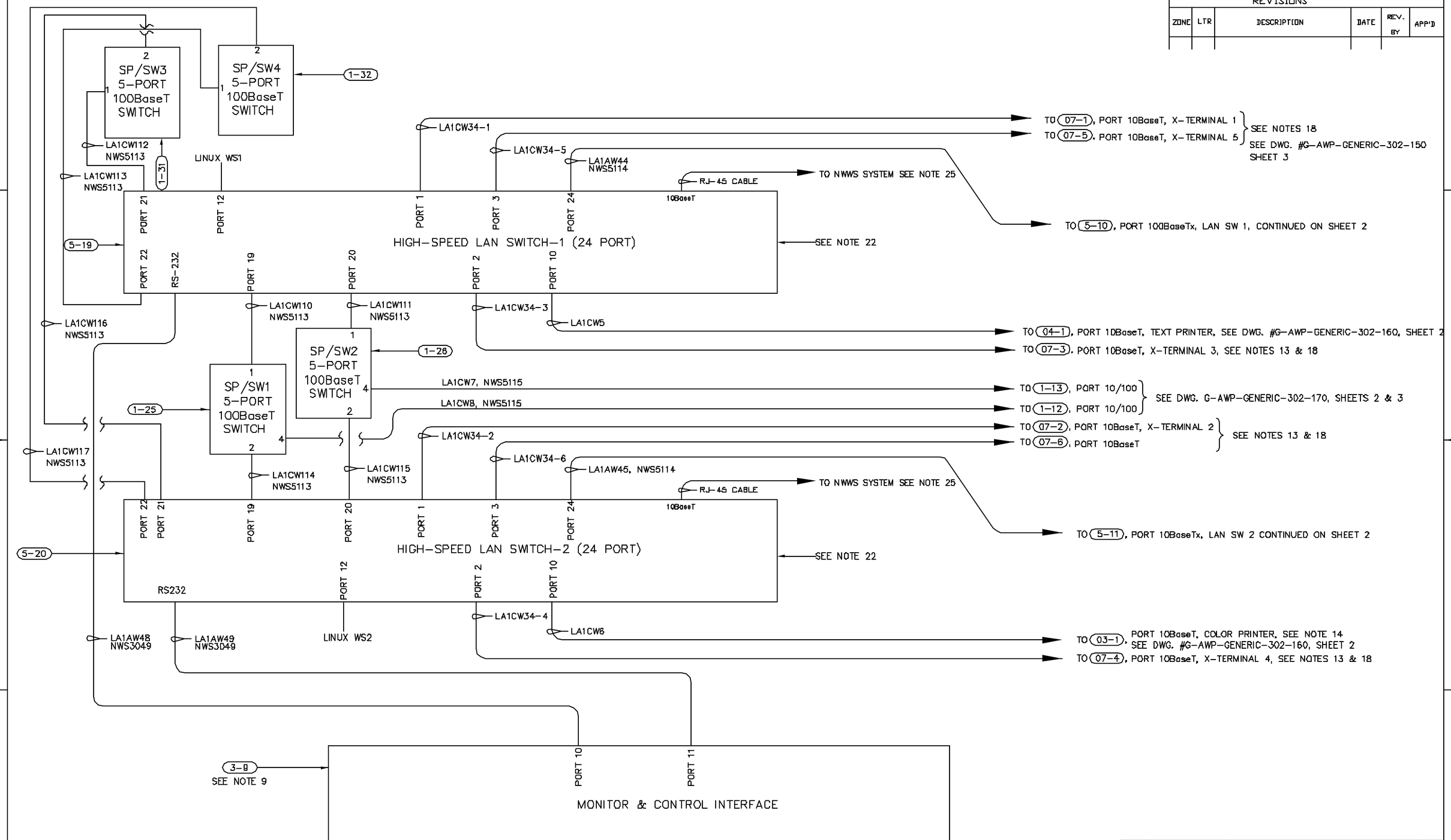

SIZE	CAGE CODE	DRAWING NO.	
D	8E187	G-AWP-GENERIC-302-140	C
SCALE NONE		SHEET 4 OF 5	FILE GEN2144C

REVISIONS					
ZONE	LTR	DESCRIPTION	DATE	REV. BY	APP'D

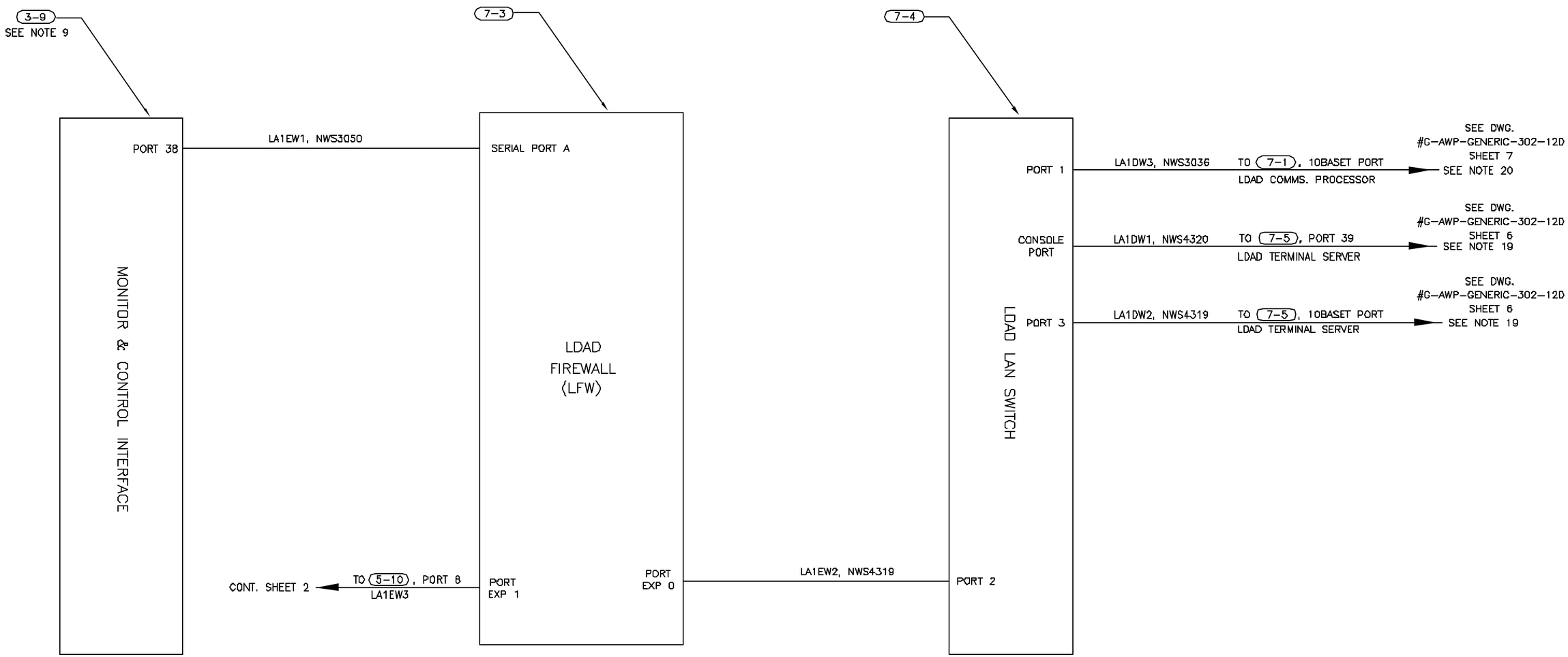

SIZE	CAGE CODE	DRAWING NO.	
D	82187	G-AWP-GENERIC-302-140	-
SCALE NONE		SHEET 5 OF 5	FILE GEN2145